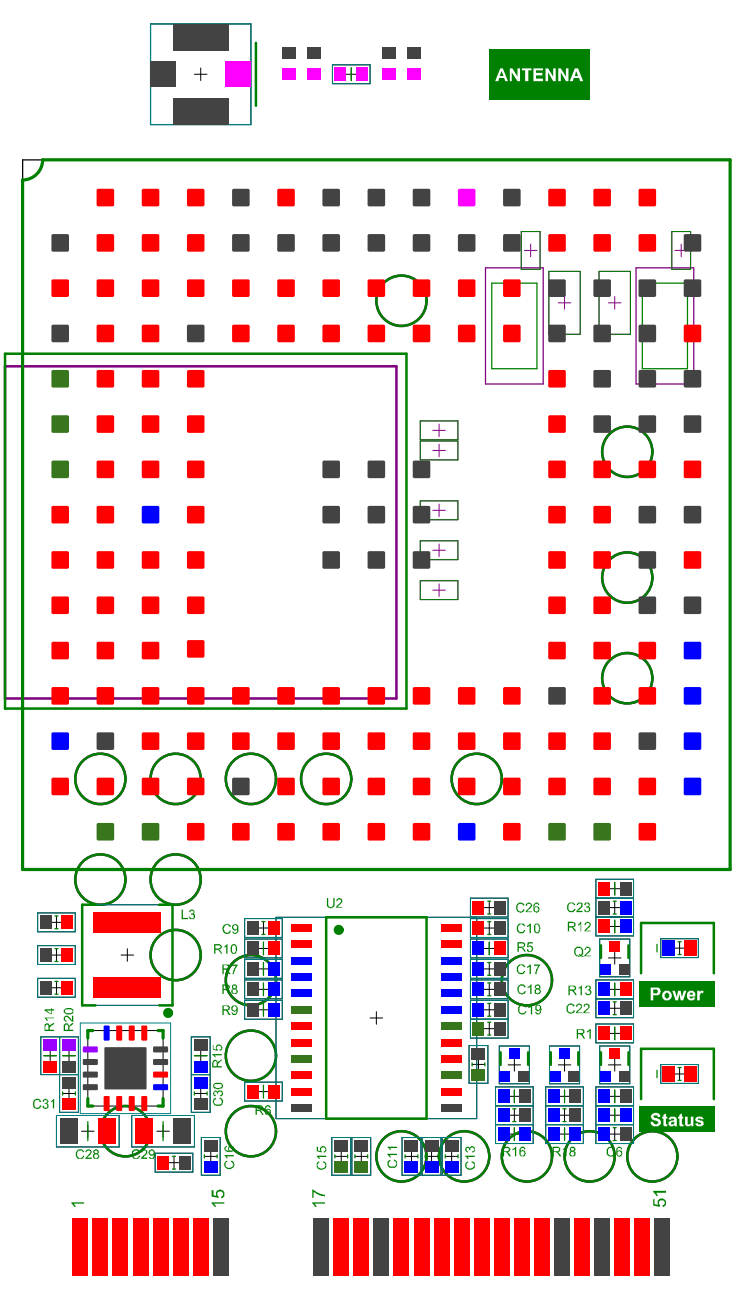
ANTENNA
L3
U2
C9
R10
R7
R8
R9
C26
C10
R5
C17
C18
C19
C23
R12
Q2
R13
C22
R1
Power
Status
R14
R20
R15
C30
C31
C28
C29
C16
R6
C15
C11
C13
R16
R18
C6
1
15
17
51

B1016A
Micro SIM Tray
DEBUG_TX
C32
C32
F1B1
F1B2
C24
C34
C1
D1
DEBUG_RX
D2
D4
D3
M09
1V8_PMON
VUSB
TX_AUX
GPIO_09
USB_BOOT
RX_AUX
USB D+
USB D-
3V8
TX
RX
P_EN
NOM
TXMEMS
RGB
BT_CLOCK
NMOS
GND
VCC

B1016A
Micro SIM Tray
DEBUG_TX
C32
C32
F1B1
F1B2
C24
C34
C1
D1
DEBUG_RX
D2
D4
D3
M09
1V8_PMON
VUSB
TX_AUX
GPIO_09
USB_BOOT
RX_AUX
USB D+
USB D-
3V8
TX
RX
P_EN
NOM
TXMEMS
RGB
BT_CLOCK
NMOS
GND
VCC

B1017CA
Micro SIM Tray
DEBUG_TX
C32
C33
C24
C34
FB1
FB2
C1
D1
D2
D3
D4
DEBUG_RX
M09
1V8_PMON
VUSB
TX_AUX
RX_AUX
USB_BOOT
GPIO_09
USB D-
USB D+
3V8
TX
RX
P_EN
VCC
GND
NOM9
YTM3M6
BR1
FLOUT
NMOS
SCM_EN